KR 150 R3100 prime

Technical data

Maximum reach	3095 mm
Rated payload	150 kg
Rated supplementary load, rotating column / link arm / arm	0 kg / 0 kg / 50 kg
Rated total load	200 kg
Pose repeatability (ISO 9283)	± 0.06 mm
Number of axes	6
Mounting position	Floor
Footprint	830 mm x 830 mm
Weight	approx. 1114 kg

Axis data

Motion range	
A1	±185 °
A2	-140 ° / -5 °
A3	-120 ° / 155 °
A4	±350 °
A5	±125 °
A6	±350 °
Speed with rated payload	
A1	105 °/s
A2	107 °/s
A3	114 °/s
A4	179 °/s
A5	172 °/s
A6	219 °/s

Operating conditions

Ambient temperature during operation	10 °C to 55 °C (283 K to 328 K)

Protection rating

Protection rating (IEC 60529)	IP65
Protection rating, robot wrist (IEC 60529)	IP65

Controller

Controller	KR C4

Workspace graphic

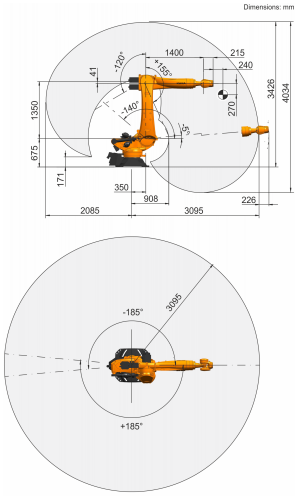

Mounting flange

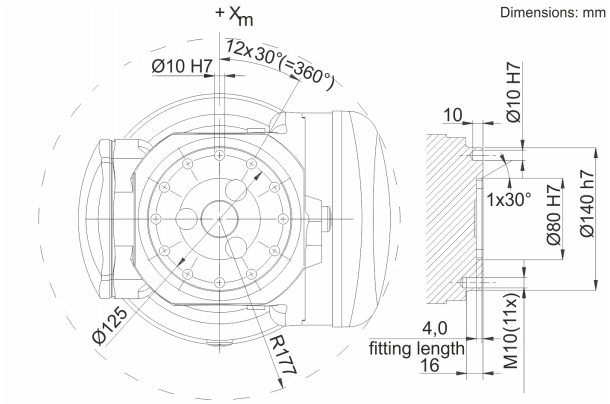

Details provided about the properties and usability of the products are purely for information purposes and do not constitute a guarantee of these characteristics. The extent of goods delivered and services performed is determined by the subject matter of the specific contract. No liability accepted for errors or omissions.
0000-182-743 / V13.1 / 26.10.2022 / en
KUKA Deutschland GmbH Zugspitzstrasse 140, 86165 Augsburg, Germany. Tel.: +49 821 797-4000, www.kuka.com