KR 10 R1100-2

Technical data

Maximum reach	1101 mm
Maximum payload	11.1 kg
Pose repeatability (ISO 9283)	± 0.02 mm
Number of axes	6
Mounting position	Floor; Ceiling; Wall; Desired angle
Footprint	208 mm x 208 mm
Weight	approx. 55 kg

Axis data

Motion range	
A1	±170 °
A2	-190 ° / 45 °
A3	-120 ° / 156 °
A4	±185 °
A5	±120 °
A6	±350 °

Operating conditions

Ambient temperature during operation	0 °C to 45 °C (273 K to 318 K)

Protection rating

Protection rating (IEC 60529)	IP65 / IP67
Protection rating, in-line wrist (IEC 60529)	IP65 / IP67

Controller

Controller	KR C4 compact

Certificates

ESD requirements	IEC61340-5-1; ANSI/ESD S20.20

Teach pendant

Teach pendant	KUKA smartPAD

Cycle time

140 cycles per minute (25 mm / 305 mm / 25 mm, 1 kg)

Workspace graphic

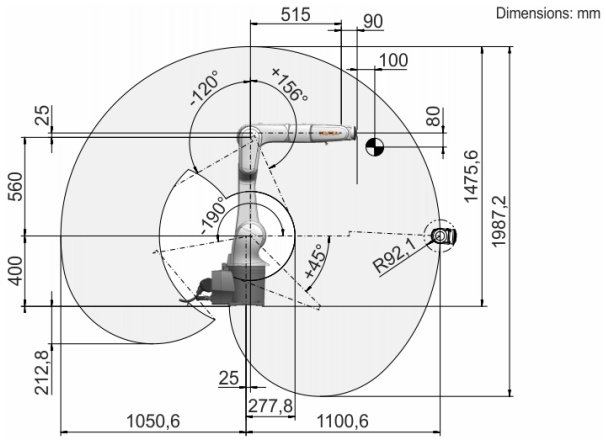

Payload diagram

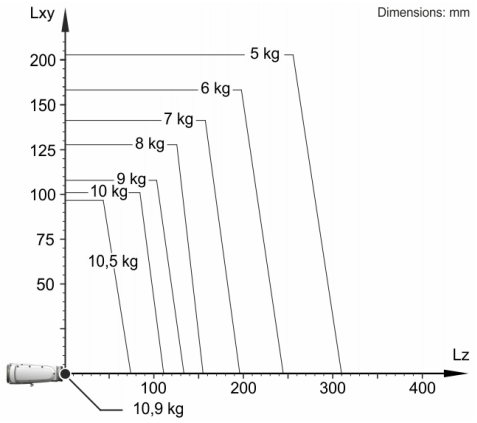

The KR 10 R1100-2 is designed for a rated payload of 5 kg in order to optimize the dynamic performance of the robot. With reduced load center distances, higher loads up to the maximum payload may be used. The specific load case must be verified using KUKA.Load. For further consultation, please contact KUKA Support.

Mounting flange

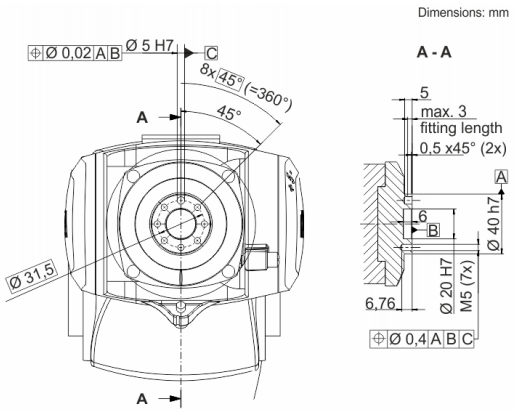

Details provided about the properties and usability of the products are purely for information purposes and do not constitute a guarantee of these characteristics. The extent of goods delivered and services performed is determined by the subject matter of the specific contract. No liability accepted for errors or omissions.
0000-290-003 / V21.1 / 10.04.2020 / en
KUKA Deutschland GmbH Zugspitzstrasse 140, 86165 Augsburg, Germany. Tel.: +49 821 797-4000, www.kuka-robotics.com