# KR 8 R2100-2 arc HW

## Technical data

| | |
|---|---|
| Maximum reach | 2101 mm |
| Rated payload | 8 kg |
| Maximum payload | 9.3 kg |
| Maximum supplementary load, rotating column / link arm / arm | - |
| Pose repeatability (ISO 9283) | ± 0.04 mm |
| Number of axes | 6 |
| Mounting position | Floor; Ceiling; Wall; Desired angle |
| Footprint | 430.5 mm x 370 mm |
| Weight | approx. 260 kg |

## Axis data

| | |
|---|---|
| Motion range | |
| A1 | ±185 ° |
| A2 | -185 ° / 65 ° |
| A3 | -138 ° / 175 ° |
| A4 | ±165 ° |
| A5 | -115 ° / 140 ° |
| A6 | ±350 ° |
| Speed with rated payload | |
| A1 | 200 °/s |
| A2 | 175 °/s |
| A3 | 190 °/s |
| A4 | 430 °/s |
| A5 | 430 °/s |
| A6 | 630 °/s |

## Operating conditions

| | |
|---|---|
| Ambient temperature during operation | 5 °C to 55 °C (278 K to 328 K) |

## Protection rating

| | |
|---|---|
| Protection rating (IEC 60529) | IP65 |
| Protection rating, robot wrist (IEC 60529) | IP54 |

## Controller

| | |
|---|---|
| Controller | KR C5; KR C4 |

## Certificates

| | |
|---|---|
| ESD requirements | IEC61340-5-1; ANSI/ESD S20.20 |

## Workspace graphic

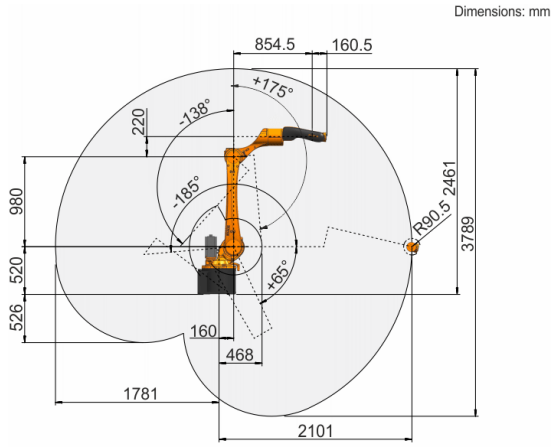


## Payload diagram

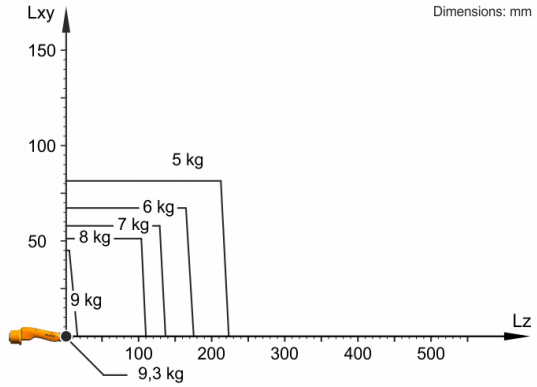


The KR 8 R2100-2 arc HW is designed for a rated payload of 8 kg in order to optimize the dynamic performance of the robot. The maximum payload of 9.3 kg applies only if the position of the center of mass is 0 mm and a supplementary load optimized for the load case is mounted. The specific load case must be verified using KUKA.Load or KUKA Compose. For further consultation, please contact KUKA Support.

## Mounting flange

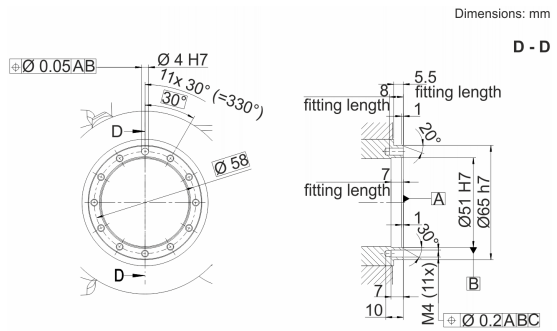


Details provided about the properties and usability of the products are purely for information purposes and do not constitute a guarantee of these characteristics. The extent of goods delivered and services performed is determined by the subject matter of the specific contract. No liability accepted for errors or omissions.
0000-321-018 / V15.1 / 27.05.2022 / en
KUKA Deutschland GmbH Zugspitzstrasse 140, 86165 Augsburg, Germany. Tel.: +49 821 797-4000, www.kuka.com