KR 120 R3100-2 F

Technical data

Maximum reach	3100 mm
Rated payload	120 kg
Maximum payload	210 kg
Maximum supplementary load, rotating column / link arm / arm	300 kg / 130 kg / 150 kg
Pose repeatability (ISO 9283)	± 0.05 mm
Number of axes	6
Mounting position	Floor
Footprint	754 mm x 754 mm
Weight	approx. 1105 kg

Axis data

Motion range	
A1	±185 °
A2	-140 ° / -5 °
A3	-120 ° / 168 °
A4	±350 °
A5	±125 °
A6	±350 °
Speed with rated payload	
A1	120 °/s
A2	115 °/s
A3	120 °/s
A4	190 °/s
A5	180 °/s
A6	260 °/s

Operating conditions

Ambient temperature during operation	0 °C to 55 °C (273 K to 328 K)

Protection rating

Protection rating (IEC 60529)	IP65 / IP67
Protection rating, robot wrist (IEC 60529)	IP65 / IP67

Controller

Controller	KR C5; KR C4

Workspace graphic

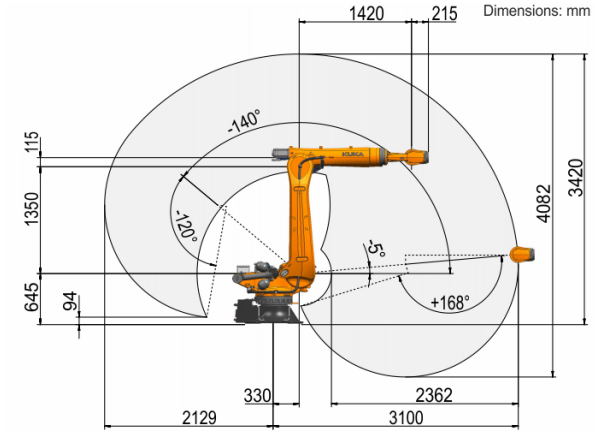

Payload diagram

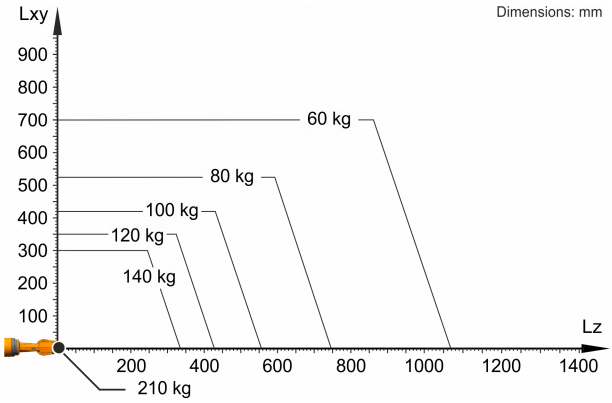

The KR 120 R3100-2 F is designed for a rated payload of 120 kg in order to optimize the dynamic performance of the robot. The maximum payload of 210 kg applies only if the position of the center of mass is 0 mm and a supplementary load optimized for the load case is mounted. The specific load case must be verified using KUKA.Load or KUKA Compose. For further consultation, please contact KUKA Support.

Mounting flange

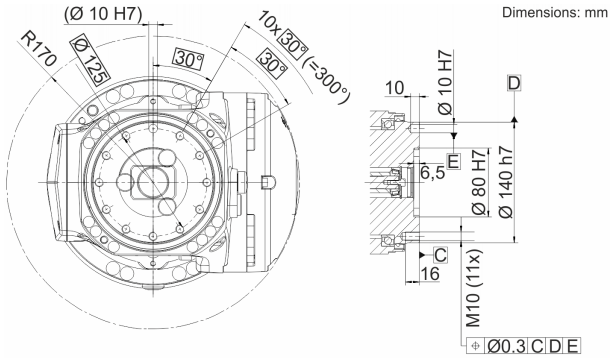

Details provided about the properties and usability of the products are purely for information purposes and do not constitute a guarantee of these characteristics. The extent of goods delivered and services performed is determined by the subject matter of the specific contract. No liability accepted for errors or omissions.
0000-346-517 / V6.1 / 26.05.2022 / en
KUKA Deutschland GmbH Zugspitzstrasse 140, 86165 Augsburg, Germany. Tel.: +49 821 797-4000, www.kuka.com